GATI DRIVES

SSPM MOTOR AND DRIVES

90% Energy Efficient • Brushless Tech • Repairable

Overview

The SSPM motor and drive are built on brushless technology and a single-phase architecture, offering robust control through the drive while eliminating the need for expensive ICs. This design ensures superior efficiency and provides a wide range of speed control.

Applications

The SSPM motor is ideal for:

- Fan Coil Units (FCU): Efficient airflow control in HVAC systems.
- Indoor/Outdoor Units (IDU/ODU): Reliable performance for residential and commercial AC systems.
- Air coolers/Desert coolers.
- Ventilation Systems: Consistent operation in air handling and exhaust units.

Its versatility makes it a go-to solution for energy-efficient and reliable applications.

Motor Operating Parameters

- Operating Voltage: 130V <= Vin <=265V
- Motor Trip Voltage: <120V, >280V
- Over Load Trip Current: Factory Set
- RPM vs Voltage: Constant RPM
- Time Delay to Start: <= 5 seconds
- Operating Temperature: -10 to 90+ °C
- Humidity: <= 98% RH@50

Model Number	Rated Power	Operating Voltage	RPM	Rated Current	Blade Size	Efficiency
GD90	90 watt	130-265 VAC	1450	0.75A	18"	90 %

@2026 Gatix Drive Pvt. Ltd.

Detailed Description

Functional Block Diagram

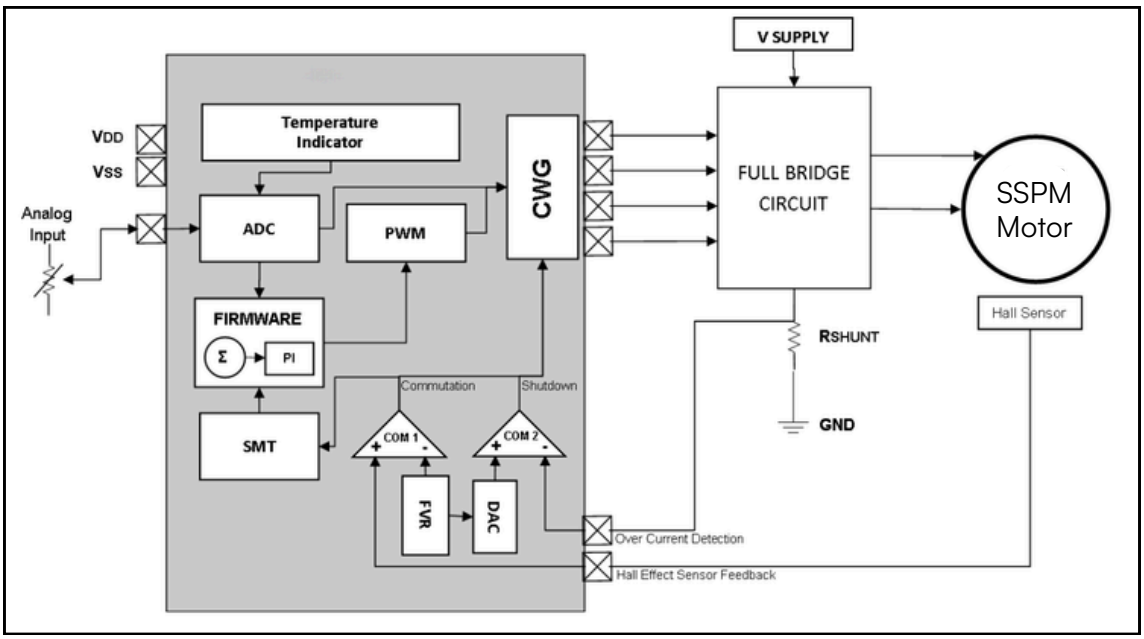

- The full-bridge circuit, which energizes the motor winding of the SSPM motor, is controlled by the CWG output.
- The rotor position of the motor is sensed by the Hall sensor.
- R-SHUNT for overcurrent protection.
- The speed can be referenced in an external analog input.

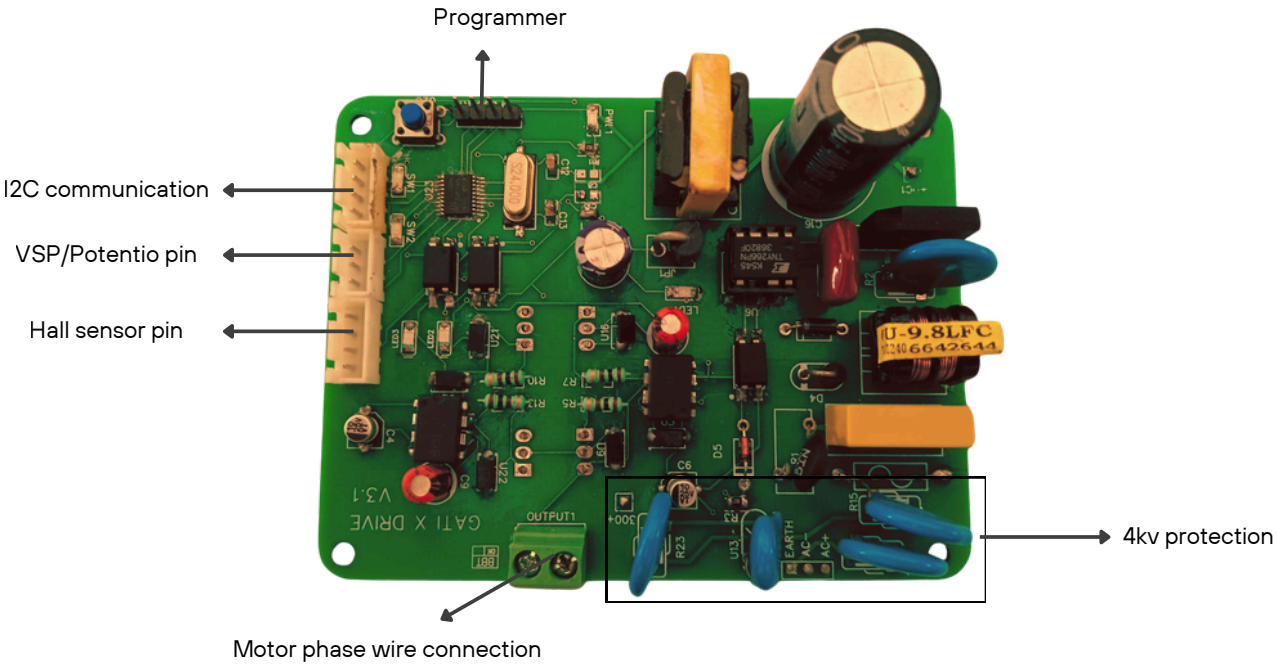

Fig. SSPM motor drive connections

@2026 Gatix Drive Pvt. Ltd.

18 inch 5 leaf blade

Test conditions:

- **Room temp:** 25-30° C
- **Humidity:** >50%
- **Data recording:** Every 20 min at steady state

Speed/ RPM	Voltage/VAC	Power/ W	Frequency/ HZ
1090	227	41.7	50
1153	227	47.6	50
1213	227	53.0	50
1255	227	58.0	50
1316	227	66.1	50
1405	227	72.0	50
1506	227	93.0	50

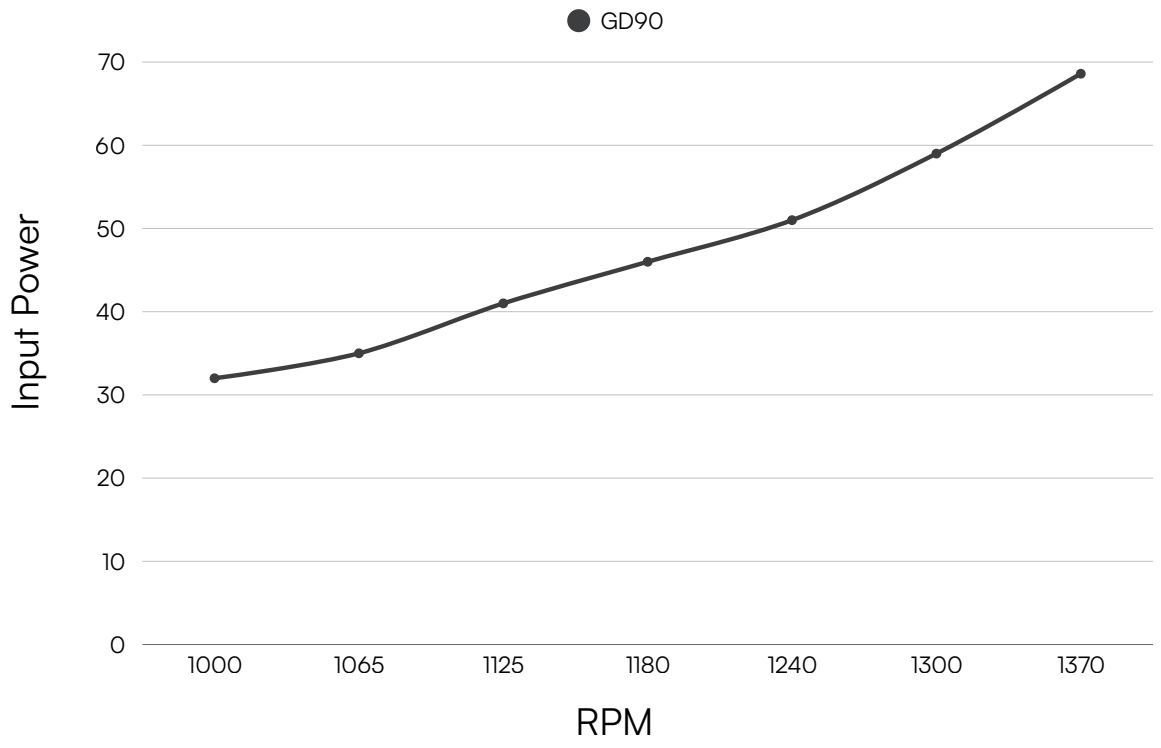

@2026 Gatix Drive Pvt. Ltd.

Electronic PCBA Protections

- **Input Voltage Protection**
  - **Wide Voltage Range:** The motor driver supports a wide input voltage range, ensuring reliable operation under varying supply conditions.
  - **Overvoltage Protection:**
    - Software Layer: The software limits input voltage to a maximum of 300VAC (tunable). Any voltage exceeding this threshold triggers an automatic shutdown or protective action.
    - Hardware Layer: Additional voltage suppressors (MOVs and TVS diodes) are incorporated to safeguard against transient voltage spikes.

- **Peak Surge and Lightning Protection**
  - **Surge Immunity:** The motor driver includes 4kV peak surge protection to withstand lightning strikes and high-voltage transients, meeting industrial safety standards.

- **Soft Start**
  - **Gradual Startup:** The motor driver incorporates a soft start mechanism, where the PWM duty cycle gradually ramps up during the startup sequence. This minimizes inrush current and smoothly achieves a steady-state operating current.

- **ESD Protection**
  - **Electrostatic Discharge Immunity:** ESD protection diodes are integrated into critical points of the design, ensuring the motor driver remains immune to static discharges, as per **IEC 61000-4-2 standards**.

- **Wattage Limitation**
  - **Power Control:** The system enforces a **maximum wattage limit** to prevent the motor from exceeding its specified power rating, ensuring safe operation and longevity.

- **Grounding and Isolation Protection**
  - **Grounding Protection:** Industrial-grade **grounding capacitors** and other components are added for comprehensive safety.
  - **Isolated Power Supply:** The motor driver uses an isolated power supply to power its peripherals, providing Class III protection for operator safety and improved reliability.

- **EMI/EMC**
  - The design adheres to strict EMI/EMC standards to minimize electromagnetic interference, ensuring compliance with CISPR 14-1 and other industrial regulations.

Motor Protections

- **Current Protection**
  - **Three-Tier Protection System:**
    - **NTC Thermistor:** Limits high inrush current during power-up to prevent component damage.
    - **Fuse Protection:** A high-reliability fuse is added to ensure system safety during fault conditions.
    - **Shunt Resistors:** These are used for current monitoring and protection via the software layer. In case of overcurrent, the controller limits the motor's operation or shuts it down.

- **Rotor Lock protection**
  - If rotor doesn't give feedback for more than 72μs the motor would be stopped and controller will retry to start the motor again and if problem persist than it will shutdown the system completely.

@2026 Gatix Drive Pvt. Ltd.

Additional/Optional Features

- Switch/ Remote Adjustable Speed Control
- Variable torque control
  - If load is changed the motor won't exceed its wattage depending upon the load the motor would change its rpm maintaining the constant input wattage consumption.
- Last speed saved
- Auto turn ON when power resumed
- Fault error code communication over I2C port

MECHANICAL DATA - GD90 Motor

Stack Height:	35mm
No. of Magnets:	8
No. of Poles:	4
No. of Bearings:	2

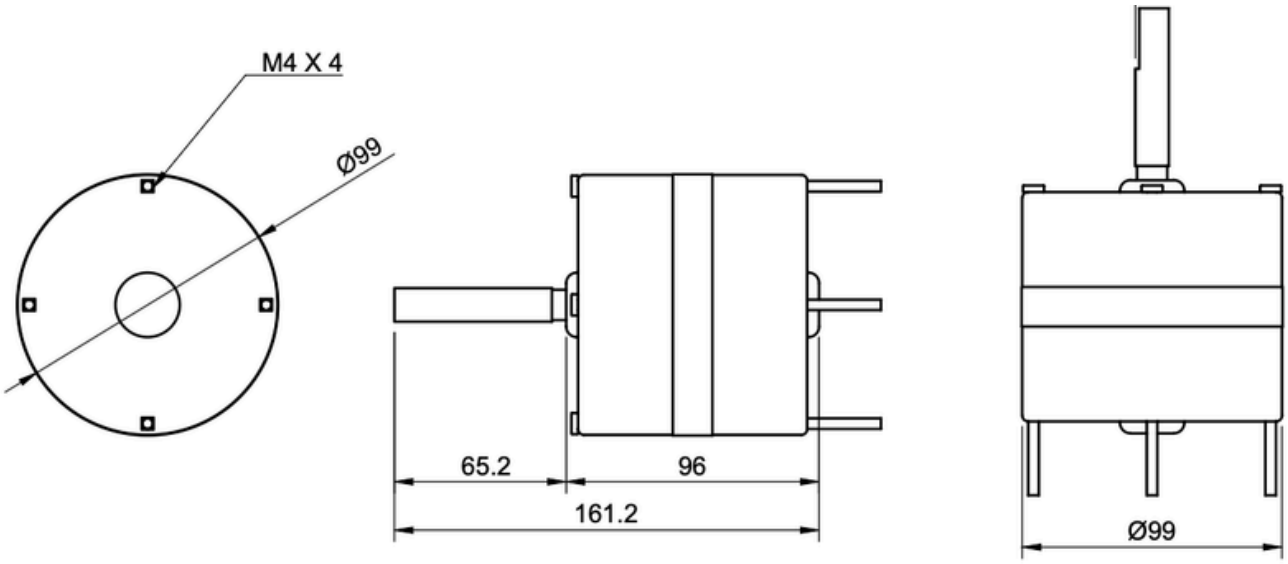

@2026 Gatix Drive Pvt. Ltd.